EMISSION ESTIMATION TECHNIQUE: WOOD-FIRED BOILERS

WOOD FIRED BOILER
EMISSION ESTIMATION TECHNIQUE (EET)

I. INTRODUCTION

This document is an Emission Estimation Technique (EET) developed by the North Coast Unified Air Quality Management District for the Air Resources Board in accordance with the Air Toxic "Hot Spots" Information and Assessment Act of 1987 (the Act). This report describes the operation of wood fired boilers which are used in the timber industry to produce heat or electricity for use in the owner's sawmill or for outside sale to utility companies. Estimating methods are presented for sizing the boiler system based on various capacity factors and for calculating the emission of air toxics from the boiler.

The Air Resources Board in its Emission Inventory Criteria and Guideline Regulation has specified a need to develop emission estimates for a wide variety of metals and incomplete combustion products from wood fired boilers, including dibenzo-p-dioxins (PCDDs), dibenzofurans, (PCDFs), polycyclic aromatic hydrocarbons (PAHs) and aldehydes.

PCDDs and PCDFs are of particular concern when evaluating potential air toxic emissions from any combustion process. Their formation is accelerated by low temperature combustion processes where the fuel might be contaminated with salts, chlorine or a wide array of chlorinated organic materials. If special precautions are followed to assure that the wood fuel does not contain any of these possible contaminants, the high temperatures experienced in a properly operated wood fired boiler should preclude the formation of measureable concentrations of PCDDs and PCDFs.

II. PROCESS DESCRIPTION

Wood fired boilers are used extensively throughout the lumber and pulping industry to generate steam and power for a variety of in-mill systems and for outside power sales to electrical utility companies. Waste wood generated by the timber industry consists of forest logging debris, bark, sawdust, planer shavings and miscellaneous sawmill trim pieces. To prepare the assorted sizes and shapes of wood waste materials for use in a boiler they are usually ground into finer particles (1"- 6") for ease of storage, handling and feeding. This ground or hogged wood waste is commonly referred to in the lumber industry as "hog fuel". It is this sub-category of biomass fuels that will be described in this EET, however the same combustion and inventory principles may be adapted to other types of biomass fuel combustion processes if the proper adjustments are made in the individual fuel species properties.

A. Types of Wood Fired Boilers

Small Boilers and Kiln Heaters
(10,000-50,000 pounds of steam per hour)

The smaller types of wood fired boilers are used to produce low pressure steam (15-150psig) for use in drying lumber in steam heated sheds, called drying kilns or for supplying steam to directly power sawmill equipment. These small boilers are usually classified as fuel cells or are of the old fashioned Dutch oven design, in which the wood combustion occurs in a refractory lined chamber and the combustion gases flow over steam heating tubes on their way out of the furnace.

Large Boilers and Electrical Generating Systems
(50,000-300,000 pounds of steam per hour)

The larger type of wood fired boilers produce steam for use in electrical power generating turbines, a portion of which may be used in the owner's sawmill and the excess electrical power is sold to a utility company. This large type boiler is usually stoker fed and fuel combustion occurs in a fire chamber, which has walls that are lined with steam heating tubes, in order to absorb radiant heat and increase the boiler's combustion efficiency. These boilers may operate at steam pressures as high as 1,000 psig and 900 degrees Fahrenheit.

B. Auxillary Boiler Operating Systems

Fuel Preparation

Wood fuel for the boiler may be generated at the owner's sawmill site or purchased and hauled to the boiler from several surrounding sawmill locations. The larger power generating boilers will often operate a truck dumping facility and separate on-site hogging system in order to produce a more uniform fuel quality. The hog fuel is usually stored in large outside piles without any protection from wind or rain, however the fuel is continually being mixed to create a consistent quality fuel supply for the boiler. Many of the small boiler operators will fuel their boilers exclusively with a high quality dry sawdust or planer shavings, which will greatly improve boiler operation and reduce boiler stack particulate emissions.

Fuel Feeding Systems

The wood fuel will be fed to the boiler by a series of belt or screw conveying and metering systems with excess fuel continually being handled and returned to the outside fuel pile to keep the furnace feeders full and to help mix the fuel pile. For those boiler systems using an exhaust gas fuel drying system the fuel will be heated prior to entry to the boiler and its contained moisture reduced by 5-10 percent depending on the temperature of the boiler exhaust gases.

Ash Removal Systems

The boiler residue and ash will consist of large boiler ash and clinkers that are produced in the hot furnace firebox system and fly ash type residue which is collected in the boilers particulate collection system. Some boilers may employ a fly ash reinjection system, in which the boiler ash removed from the cyclonic dust collectors is screened to separate fine particulate matter from larger unburned carbon particles. The recovered carbon particles are then conveyed by an air blower back into the boiler to be reburned. Ash removed from the cyclonic or other dry type collectors is very finely divided and must be handled in closed conveying systems to prevent it from becoming resuspended and causing neighborhood ash fallout problems. Most boiler operators will inject a small quantity of water into the hot fine ash in order to agglomerate it and make it easier to handle. Those boiler systems using wet scrubbers for particulate control do not need to worry about fugitive emissions being created by the flyash, but instead must separate the ash from the scrubbing water and reclaim it in a manner that it may be concentrated and hauled to an approved ash disposal site.

C. Process Flow Diagrams

Figure 1: Small Wood Fired Kiln Heater

Figure 2: Large Utility Generator with Fuel Drier and Cooling Tower

FIGURE 1

PROCESS FLOW DIAGRAM

WOOD FIRED BOILER

KILN DRYING SYSTEM

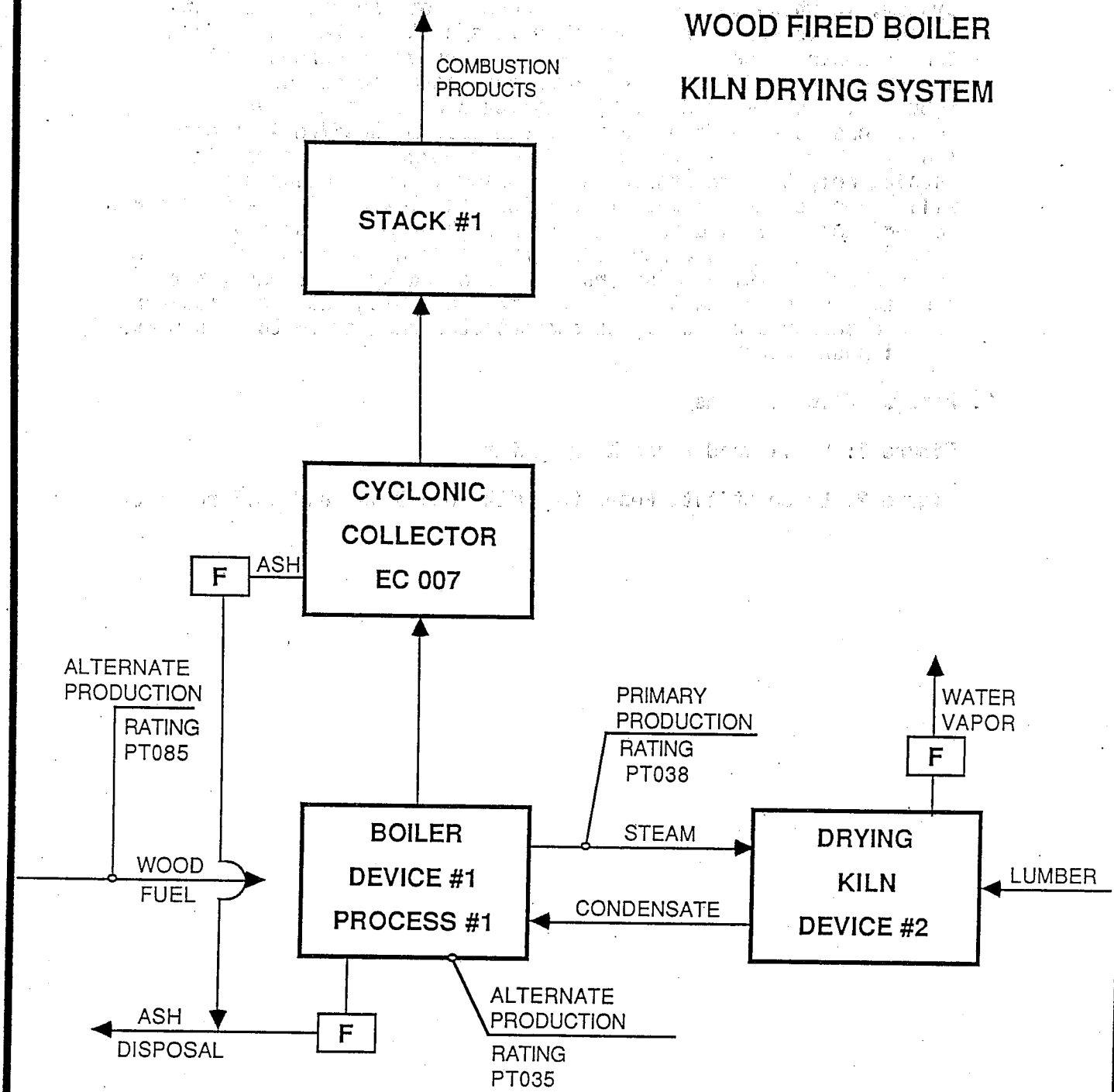

August, 1989

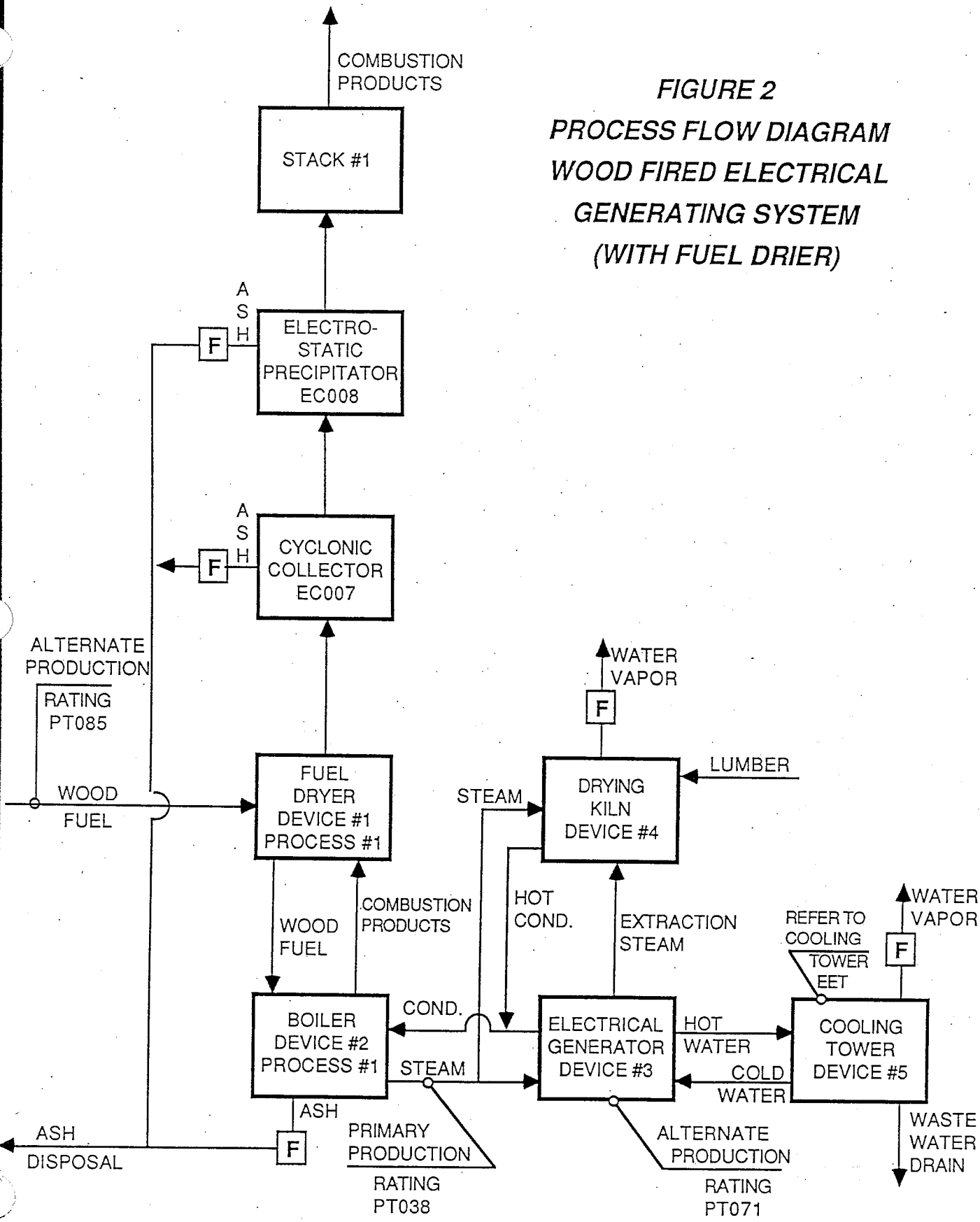

FIGURE 2
PROCESS FLOW DIAGRAM
WOOD FIRED ELECTRICAL
GENERATING SYSTEM
(WITH FUEL DRIER)

III. POTENTIAL SOURCES OF TOXIC AIR EMISSIONS

A. Boiler Exhaust Stack

The boiler's main exhaust stack will be the point of most major air pollutant and air toxic emissions. Particulates will be released from this stack, which may contain metals, TCDDs, TCDFs, and condensed PAHs. Lower boiling PAHs, aldehydes and other low boiling products of combustion may exit the main boiler stack in a gaseous form.

B. Fugitive Emissions

Fuel Handling

Fuel handling emissions are composed of finely divided bark and wood particles that are suspended by the wind and are usually large enough that they are redeposited on the premises of the sawmill site. Those few wood particles that do escape the plant premises are non-toxic and rarely cause major neighborhood nuisance problems.

Ash Handling and Disposal

Ash particles from the particulate collectors are very fine and dry and may carry for great distances. They will create a nuisance to nearby residences or businesses. In addition, these fine ash particles will contain the same air toxic compounds that are emitted with the ash that escapes from the main stack.

C. Cooling Towers

Small wood fired boilers usually will not use cooling towers. The steam condensate which returns from the drying kilns is returned directly to the boiler for reheating. Large wood fired boilers use cooling towers to reduce the exhaust condensing temperature of their turbine generator for improved steam cycle efficiency. The cooling water from the condensing turbine is circulated through a series of decks in cooling towers, where a portion of the water evaporates to remove heat and cool the remainder of the water passing through the tower. The water escaping from the cooling tower may contain a variety of treatment chemicals used in the circulating water stream to prevent scale or algae formation. An assessment method for evaluating air toxic emissions from cooling towers is the subject of a separate EET.

IV. AIR EMISSION CONTROL EQUIPMENT

A. Cyclonic Separators

Almost all wood fired boilers use some type of cyclonic inertial particulate collection device either in the form of one large

cyclone separator or multiple banks of small cyclonic tubes, commonly referred to as multiclones. The only exception to this situation would be for very old Dutch oven type boilers which have large fireboxes and slow exhaust gas flow through a tall natural draft stack. This type of boiler is becoming obsolete in the industry because of its excessive particulate emissions and poor efficiency.

B. Wet Scrubbers

Wet scrubbers are used as particulate collection devices on many wood fired boilers and operate on the principle of contacting a circulating water spray system with the hot particles in the exhaust stack gases. These systems produce a water saturated vapor plume and have the added advantage of possibly absorbing some combustion gases that may be water soluble. Wet scrubbers were used extensively in the lumber industry for particluate collectors during the late 1960's and early 1970's, but presently are used very little on new boiler systems because of their high pressure drop, low collection efficiency and waste water disposal problems.

C. Electronic Precipitators

Within the last five years, electrostatic precipitators (ESPs) have become the most favorable type of particulate collector for wood fired boilers because of their high collection efficiency, low pressure drop and relatively low maintanence costs. In an ESP the particulate is charged with an electrical current and collected on plates which possess an opposite electrical charge. Intermittently the collection plates are struck or rapped to dislodge the agglomerated particulate from the plates into a collection hopper located below the ESP. ESPs are always preceeded by a cyclonic collector which is used to collect the large particles from the gas stream. A modification of the standard ESP, called an electrofied filter bed passes the ash particle laden exhaust gas stream over an electrified grid contained in a decending column of small gravel. The ash particles are collected on the circulating gravel by impaction and electrostatic attraction and later removed from the gravel by screening. This type of collection device achieves efficiencies comparable to the conventional electrostatic precipitator.

D. Fabric Filters (Baghouses)

Baghouses are considered the most efficient collection device for a wide variety of particulate emissions and have recently found some limited use in the lumber industry. They operate on the principle of a very positive filtration process in which the exhaust gas stream is forced through a fabric material and the gases are

filtered by the fabric's pores, in addition to the already captured matrix of previously collected particles. This type collector may be precoated with various absorbant materials to aid in the collection of gaseous pollutants contained in the exhaust gas stream. Baghouses require a higher pressure drop and have increased maintenance costs in comparison to ESPs.

E. Ammonia Injection Systems

With the increased emphasis that is being placed on the reduction of nitrogen oxide emissions from large stationary sources, several large wood fired boilers have installed ammonia injection systems. If ammonia is introduced into the furnace combustion zone at the proper furnace temperature location NOx emissions are reduced. This process requires close control of the furnace firing rate and ammonia injection rate to prevent the release of large amounts of unreacted ammonia which would need to be accounted for in the air toxics inventory.

V. EMISSION CALCULATION METHODS

Stack source testing is the preferred and most accurate method of accurately determining the emission of air toxics and other pollutants that may be released from the stack of any stationary source. Certain types of processes or combustion systems are similar enough that their emissions can be estimated based upon established sizing factors. This is the case with wood fired boilers, which all burn wood waste of a fairly consistent composition at elevated temperatures and the stack emissions may be related to the wood burning capacity of the boiler and the collection efficiency of the control equipment.

A. Quantify Boiler Sizing Parameters

Boilers are almost always sized in terms of steam generating capacity, fuel burning rate or total heat input to the combustion system and these terms may be readily interchanged depending on the individual boiler's configuration.

Steam flow

Steam flow rate is the most commonly accepted terminology for boiler sizing and will be used as the reference in this EET for development of all other boiler correlation factors. The main variations in steam flow will be influenced by the boiler feed water temperature and steam pressure and temperature. Small boilers will usually produce low pressure steam from a hot return condensate, while large utility generating boilers will produce a high pressure, high temperature steam from a preheated feed water system. These and other boiler design configuation factors will affect the total heat input and overall boiler efficiency.

Fuel Usage

Sizing a wood fired boiler on the basis of fuel usage is one of the least desireable boiler sizing methods. The dry wood fuel will have a gross heat of combustion ranging from 8,000-9,000 BTU per pound (Reference 4), but large variations may occur in the moisture content of the fuel depending upon its origin from the sawmilling process and the fuels' exposure to rain or heat. Some wet fuels may contain as much as 70 weight percent water and have difficulty in supporting combustion, while dry planer shavings may have a water content as low as 20-30 percent by weight. The difficulty of measuring the fuel feeding rate to a wood fired boiler presents an additional complication in using fuel rate as the basis for boiler sizing.

Heat Input

Heat input, like fuel usage is difficult to accurately measure, but has become a convenient measurement unit for relating boiler emission factors. It is most frequently back calculated from the boiler steam flow conditions rather than actually measured.

Horsepower Output

Some small older wood fired boilers may be rated in terms of horsepower output instead of heat input. Sizing a boiler in this manner disregards any consideration of boiler efficiency. One boiler horsepower is equivalent to the heat required to change 34.5 pounds per hour of water into steam at 212 degrees Fahrenheit, representing a heat output of 33,475 BTU per hour.

Megawatt Output

Large electrical power generating boilers will have a megawatt-hour capacity rating. If all steam produced is used exclusively for power generation, one megawatt-hour will be equivalent to 10,000 pounds of steam per hour.

B. Heat Balance and Thermal Efficiency

Wood fired boilers will always have a lower thermal efficiency than their fossil fuel fired counterparts because of the moisture contained in the wood fuel. Any process used to remove this contained moisture will greatly improve boiler efficiency. Wood fired boilers have a thermal efficiency ranging from 65-70 percent, with some newer systems employing fuel driers having efficiencies up to 75 percent.

C. Emission Factor Correlations

Emission factor calculation procedures presented in this EET will be related to boiler operating capacities, stack exhaust gas flow rates and particulate collection estimates. These emission factors will be used to describe emission quantities from various sub-categories of wood fired boilers, typically of the types shown on Figures 1 and 2.

D. Source Testing Requirement

Source testing will be needed to identify the range of expected emissions of gaseous air toxics which are the products of incomplete combustion or to analyze the composition of condensed air toxics which are contained on the stack particulate emissions. Wherever possible a representative number of similar wood fired boilers must be source tested in order to develop a set of pooled or generic emission factors.

REFERENCES

de Lorenzi, Otto, Combustion Engineering Reference Book, Combustion Engineering Superheater Inc. New York, NY. 1951

National Council of the Paper Industry for Air and Stream Improvement, "A Polycyclic Organic Materials Emissions Study for Industrial Wood-fired Boilers", NCASI Technical Bulletin No. 400, New York, NY. May 1983

U.S. EPA, 1988, Toxic Air Pollutant Emission Factors, A Compilation for Selected Air Toxic Compounds and Sources, EPA-450/2-88-006a

U.S. EPA, 1984, Locating and Estimating Air Emissions from Stationary Sources of Polycyclic Organic Materials (POM), EPA-450/4-84-007p

APPENDIX

A. Boiler Sizing Diagram

The following boiler sizing correlations are based upon a boiler steam production increment of 1,000 pounds per hour for either a small kiln heater or large electrical utility generator and the following wood properties:

Wood Fuel @ 50 percent moisture, based on total weight
Heat Content of Fuel - 8,500 BTU per pound, dry basis
Thermal Efficiency: Small Boilers - 65 percent
Large Boilers - 70 percent

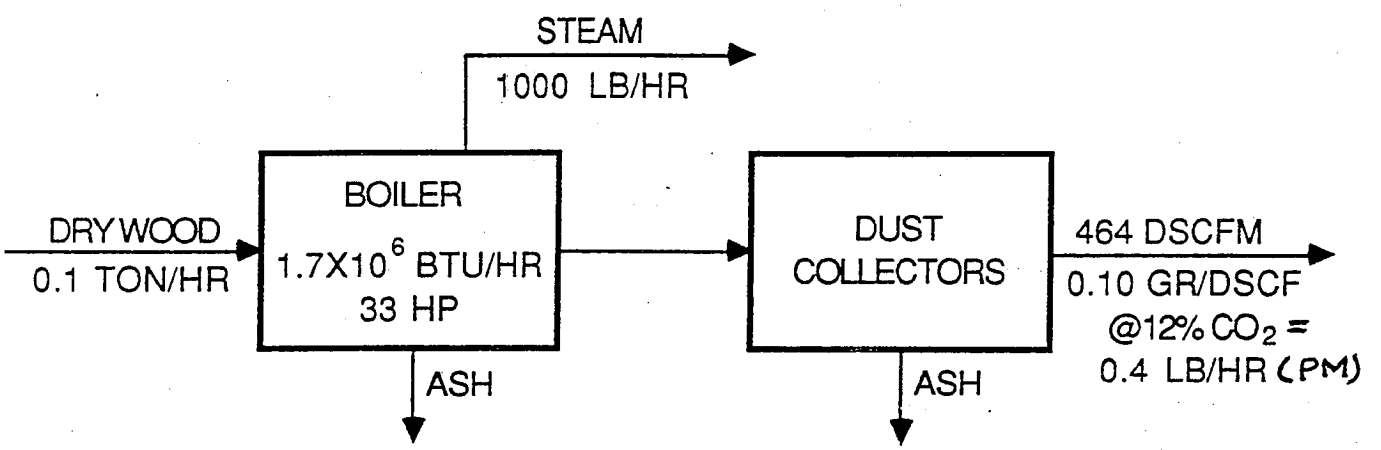

B. Sample Calculation Procedures

Estimate fuel feed rate for a boiler producing 85,000 pounds of steam per hour used for driving an electrical generator.

(85,000 lb steam)/(1,000 lb steam) x (1,000 lb steam per 0.1 ton fuel)= 8.5 tons/hr

What is the total particulate emission rate from this boiler if the exhaust gases contain 0.07 grains per standard dry cubic foot of exhaust gas at 12 percent CO_2?

(85,000 lb)/(1,000 lb) x (0.07 gr/dscf)/(0.10 gr/dscf) x (0.4 lb/hr) = 23.8 lb/hr

What is the stack flow rate in dry standard cubic meters per hour for this boiler.

(85,000 lb/1,000 lb) x (464dscf/min) x (0.0283dscm/dscf) x (60min/hr) = 67,000 dry standard cubic meters per hour

C. Air Toxic Emission Calculation Procedure

Perform source tests as required to obtain representative values for concentrations of air toxic emissions in stack gases or use accepted emission factors.

PARTICULATE METALS

METAL	PM CONTENT* (ug/g)		STACK PM RATE (lb/hr)		METAL EMISSION RATE (lb/hr)
Arsenic	_____	x	_____	=	_____ x 10^{-6}
Beryllium	_____	x	_____	=	_____ x 10^{-6}
Cadmium	_____	x	_____	=	_____ x 10^{-6}
Chromium	_____	x	_____	=	_____ x 10^{-6}
Copper	_____	x	_____	=	_____ x 10^{-6}
Lead	_____	x	_____	=	_____ x 10^{-6}
Manganese	_____	x	_____	=	_____ x 10^{-6}
Mercury	_____	x	_____	=	_____ x 10^{-6}
Nickel	_____	x	_____	=	_____ x 10-6
Selenium	_____	x	_____	=	_____ x 10-6
Zinc	_____	x	_____	=	_____ x 10-6

* NOTE: PM CONTENT refers to the metal concentration in the particulate matter sample collected from the boiler stack.

MISCELLANEOUS ORGANICS

COMPOUND	CONCENTRATION ug/dscm		STACK FLOW dscm/hr.		EMISSION RATE ug/hr
Formaldehyde	_____	x	_____	=	_____
Benzene	_____	x	_____	=	_____
Total Chlor Org.	_____	x	_____	=	_____

POLYCYCLIC AROMATIC HYDROCARBONS

COMPOUND	EMISSION RATE ug/kg dry wood		WOOD BURN RATE (kg/hr)		PAHs (ug/hr)
Naphthalene	____	x	_____	=	_____
Benzo(a)pyrene	____	x	_____	=	_____
Other PAHs		x		=	
Total PAHs	____	x	_____	=	_____

DIBENZO-DIOXINS AND DIBENZO-FURANS

EMISSION FACTORS CALCULATED FROM ARB SOURCE TEST DATA

NOTE: These emission factors may only be used for wood fired boilers of similar design, operating methods and fuel charactersitics, subject to APCD and ARB approval.

DIOXIN EMISSION FACTORS FOR WOOD FIRED BOILERS

TYPE OF WOOD FIRED BOILER SYSTEM	LB 2,3,7,8 DIOXIN EQ PER BILLION LB STEAM
FUEL CELLS & DUTCH OVEN W/MULTICLONES	0.0010
FUEL CELLS W/ESP's OR WET SCRUBBERS	0.0003
STOKER FIRED BOILERS W/ESP's	0.0043 (d)
STOKER FIRED W/WET SCRUBBERS	0.0043 (d)
STOKER FIRED W/ESP's AND FUEL DRIERS	0.0043 (d)
FLUIDIZED BEDS W/ESP's	0.0012

NOTE: (d) Default value to be used for all unclassified boilers of similar design and feed types. Owner may substitute actual source test data, if available.

2,3,7,8 DIOXIN EQUIVALENT CALCULATION METHOD

BOILER STEAM RATE BILLION LB/YR		LB 2,3,7,8 DIOXIN EQ. PER BILLION LB STEAM		2,3,7,8 EQ LB/YR
(LB/HR STM) X 8760 HR	X	DIOXIN FACTOR	=	LB/YR DIOXIN
X 8760 HR	X		=	

CHAPTER VI
BIBLIOGRAPHY

Chapter VI is a compilation of references which may be useful to facility operators. The ARB staff has not evaluated these. In addition, some of the references may lack complete information; for example, some do not have city and state of publication.

Aldrich Chemical Company, Inc. 1986. The Aldrich Catalog-Handbook of Fine Chemicals. Milwaukee, Wisconsin.

American Chemical Society. 1985. Formaldehyde: Analytical Chemistry and Toxicology. (Turoski, V., Editor, Advances in Chemistry Series 210, from a symposium of the ACS, St. Louis, Missouri, April 8-13, 1984.)

American Chemical Society. 1975. Trace Elements in Fuel. (Babu, Suresh P., Editor, Advances in Chemistry Series 141, from a symposium of the ACS.)

American Petroleum Institute. June 1983. Characterization of Particulate Emissions from Refinery Process Heaters and Boilers. API Publication No. 4365. (Weston, Roy F.). Washington, D.C.

Barnard, W. R., et al. June 1986. "Elemental Chemistry of Unpaved Road Surface Materials". Paper 86-21.2, 79th Annual Meeting of the Air Pollution Control Association, June 22-27, 1986.

California Air Resources Board. June 1989. Summary sheets listing current status of the AB 1807 toxic air contaminant identification and control processes. Sacramento, California.

California Air Resources Board. April 1988. Sources and Concentrations of Chloroform Emissions in the South Coast Air Basin. (Science Applications International Corporation, SAIC-86/1105. ARB Contract Number A4-115-32). Sacramento, California.

California Air Resources Board. Program Update. (AB 1807) Air Toxics Update. Sacramento, California.

California Air Resources Board. December 1987. Evaluation of Potential Toxic Air Contaminants. Phase I, Final Report. (Science Applications International Corporation, SAIC-87/1035, ARB A4-131-32). Sacramento, California.

California Air Resources Board. August 1987. Lifetimes and Fates of Toxic Chemicals in California's Atmosphere. Final Report. (Statewide Air Pollution Research Center, U.C. Riverside, ARB A5-104-32). Sacramento, California.

California Air Resources Board. July 1987. Emissions of Volatile and Potentially Toxic Organic Compounds from Sewage Treatment Plants and Collection Systems. Final Report. (U.C. Davis, ARB A5-127-32). Sacramento, California.

California Air Resources Board. March 1987. Inventory of Chlorophenol Use in the Forest Products Industry and Investigation of Related Emissions of Chlorinated Dibenzodioxins and Dibenzofurans. Executive Summary and Draft Final Report. (Systems Applications, Inc., SYSAPP-87/036). Sacramento, California.

California Air Resources Board. May 1985. Improvement of the Emission Inventory for Reactive Organic Gases and Oxides of Nitrogen in the South Coast Air Basin. Executive Summary, Volume I: Main Report and Volume II: App A-H. (Systems Applications, Inc. and Radian Corp., SYSAPP-85/080, SYSAPP-85/082). Sacramento, California.

California Air Resources Board. January 1985. Assessment of Used Solvent and Used Oil as Fuel in California. Sacramento, California.

California Air Resources Board. December 1984. Preliminary Inventory of Substances of Special Interest. Sacramento, California.

California Air Resources Board. May 1984. Air Pollution Control at Resource Recovery Facilities. Sacramento, California.

California Air Resources Board. February 1982. An Assessment of the Volatile and Toxic Organic Emissions from Hazardous Waste Disposal in California. Sacramento, California.

California Air Resources Board. March 1980. An Inventory of Carcinogenic Substances Released into the Ambient Air of California. Final Report - Task II and IV. (KVB, Inc., KVB 26900-836 for Science Applications, Inc.). Sacramento, California.

California Air Resources Board. April 1979. Hydrocarbon Characterization of Agricultural Waste Burning. Final Report. (Statewide Air Pollution Research Center, U.C. Riverside). Sacramento, California.

California Air Resources Board. February 1979. An Inventory of Carcinogenic Substances Released into the Ambient Air of California. Volume I - Final Report, "Screening and Identification of Carcinogens of Greatest Concern." (Science Applications, Inc., SAI-068-80-504). Sacramento, California.

California Air Resources Board. February 1979. Fine Particle Emissions from Stationary and Miscellaneous Sources in the South Coast Air Basin. Final report. (KVB, Inc., KVB 5806-783). Sacramento, California.

California Air Resources Board. May 1978. Alternatives to Organic Solvent Degreasing. (Eureka Laboratories, Inc., ARB A6-206-30). Sacramento, California.

Chemical and Engineering News: "Facts and Figures", "Key Chemicals", "Top 50 Chemicals", and "World Chemical Outlook". American Chemical Society. Washington, D.C.

Chemical Marketing Reporter. "Chemical Profile". Schnell Publishing Company, Inc. New York, New York.

CRC Press, Inc. 1972. CRC Handbook Series: Handbook of Environmental Control. Volume 1: Air Pollution. (Bond, R. G., Editor). Cleveland, Ohio.

EPRI. February 1983. Measurements of POM Emissions from Coal-Fired Utility Boilers. EPRI Report CS-2885. Palo Alto, California.

EPRI. December 1978. Polycyclic Organic Materials and the Electric Power Industry. EPRI EA-787-SY WS-76-67. Palo Alto, California.

Hawley, G. 1981. The Condensed Chemical Dictionary. Tenth Edition. New York, New York. Van Nostrand Reinhold Company.

Merck and Company, Inc. The Merck Index. Tenth Edition. Rahway, New Jersey.

National Research Council. 1981. Formaldehyde and Other Aldehydes. National Academy Press. Washington, D.C.

Nriagu, Jerome O., and Davidson, Cliff I. Toxic Metals in the Atmosphere. John Wiley and Sons.

Oil and Gas Journal: "Annual Refining Survey". Energy Group of PennWell Publishing Company. Tulsa, Oklahoma.

Radian Corporation. February 1985. Washington Toxic Air Contaminants Study. Revised Final Report, 243-041-05-03.

Sax, N. I. 1988. Dangerous Properties of Industrial Materials. 7th Edition. Van Nostrand Reinhold Company. New York, New York.

SRI International. 1980. Directory of Chemical Producers, United States of America. Menlo Park, California.

SRI International. August 1979. Assessment of Human Exposures to Atmospheric Acrylonitrile. (Later part of EPA collection "Human Exposure to Atmospheric Concentrations of Selected Chemicals".)

SRI International. May 1979. Assessment of Human Exposures to Atmospheric Ethylene Dichloride. (Later part of EPA collection "Human Exposure to Atmospheric Concentrations of Selected Chemicals".)

SRI International. January 1979. Assessment of Human Exposures to Atmospheric Perchloroethylene. Draft Final Report. (Later part of EPA collection "Human Exposure to Atmospheric Concentrations of Selected Chemicals".)

SRI International. July 1978. Atmospheric Ethylene Dibromide: A Source-Specific Assessment. (Later part of EPA collection "Human Exposure to Atmospheric Concentrations of Selected Chemicals".)

U.S. Consumer Product Safety Commission. June 1982. Formaldehyde in Selected Consumer Products. (Karels, Terrance R.). Washington, D.C.

U.S. Department of Commerce. April 1980. Assessment of Atmospheric Emissions from Petroleum Refining. Volume 2. Appendix A. NTIS PB-80-225261. (Radian Corporation). Industrial Environmental Research Laboratory. Research Triangle Park, North Carolina.

U.S. Department of Health, Education, and Welfare. 1977. The NIOSH Manual of Sampling Data Sheets. 1977 Edition. National Institute for Occupational Health and Safety.

U.S. Environmental Protection Agency. April 1988. Air Emissions Species Manual: Volume I. Volatile Organic Compound Species Profiles, and Volume II. Particulate Matter Species Profiles. EPA 450/2-88-003 A and B, respectively. (Radian Corp., EPA 68-02-3994). Research Triangle Park, North Carolina.

U.S. Environmental Protection Agency. January 1988. Common Synonyms for Chemicals Listed Under Section 313 of the Emergency Planning and Community Right to Know Act. EPA Office of Toxic Substances. Washington, D.C.

U.S. Environmental Protection Agency. 1988. Title III Section 313 Release Reporting Guidance. EPA 560/4-88-004 a thru q. EPA Office of Pesticides and Toxic Substances. Washington, D.C.

U.S. Environmental Protection Agency. Locating and Estimating Air Emissions from Sources of (various substances). EPA 450/4-84-007 a thru q. Research Triangle Park, North Carolina.

U.S. Environmental Protection Agency. December 1987. Estimating Releases and Waste Treatment Efficiencies for the Toxic Chemical Release Inventory Form. EPA 560/4-88-002. EPA Office of Pesticides and Toxic Substances. Washington, D.C.

U.S. Environmental Protection Agency. December 1987. Hazardous Waste Treatment, Storage, and Disposal Facilities (TSDF) - Air Emission Models. EPA 450/3-87-026.

U.S. Environmental Protection Agency. December 1987. Toxic Air Pollutant - Source Crosswalk: A Screening Tool for Locating Possible Sources Emitting Toxic Air Pollutants. EPA 450/4-87-023a.

U.S. Environmental Protection Agency. July 1987. Air Toxics Emission Inventory for the Southeast Chicago Area. EPA Region V. Chicago, Illinois.

U.S. Environmental Protection Agency. May 1987. Criteria Pollutant

Emission Factors for the 1985 NAPAP Emissions Inventory. EPA 600/7-87-015.

U.S. Environmental Protection Agency. April 1987. Preliminary Compilation of Air Pollutant Emission Factors for Selected Air Toxic Compounds. EPA 450/4-86-010a. Research Triangle Park, North Carolina.

U.S. Environmental Protection Agency. January 1987. Ammonia Emission Factors for the NAPAP Emission Inventory. Final Report. EPA 600/7-87/001. PB 87-152336/REB. (Alliance Technologies Corp., EPA 68-02-3168). Research Triangle Park, North Carolina.

U.S. Environmental Protection Agency. September 1986. Control Technologies for Hazardous Air Pollutants: Handbook. EPA 625/6-86/014. EPA Air and Energy Engineering Research Laboratory. Research Triangle Park, North Carolina.

U.S. Environmental Protection Agency. July 1986. Compiling Air Toxics Emission Inventories. EPA 450/4-86-010. PB 86-238086/REB. Research Triangle Park, North Carolina.

U.S. Environmental Protection Agency. July 1986. How the Clearinghouse Can Help to Answer Your Air Toxics Questions. EPA 450/5-86-009. National Air Toxics Information Clearinghouse. Research Triangle Park, North Carolina.

U.S. Environmental Protection Agency. May 1986. Evaluation of Control Technologies for Hazardous Air Pollutants. Project Summary. EPA 600/S7-86/009.

U.S. Environmental Protection Agency. May 1986. Santa Clara Valley Integrated Environmental Management Project. Revised Stage One Report. EPA OPA/OPPE.

U.S. Environmental Protection Agency. February 1986. Report to Congress on the Discharge of Hazardous Wastes to Publicly Owned Treatment Works (The Domestic Sewage Study). EPA 530-SW-86-004. Also, Volume 2. Technical Appendices.

U.S. Environmental Protection Agency. January 1986. Emission Factors for Equipment Leaks of VOC and HAP. EPA 450/3-86-002. PB 86-171527/REB. (Radian Corp., EPA 68-02-3889). Research Triangle Park, North Carolina.

U.S. Environmental Protection Agency. January 1986. Hydrogen Chloride and Hydrogen Fluoride Emission Factors for the NAPAP Emission Inventory. Project Summary. EPA 600/S7-85/041.

U.S. Environmental Protection Agency. October 1985. Survey of Chloroform Emission Sources. EPA 450/3-85-026. PB 86-136504. Research Triangle Park, North Carolina.

U.S. Environmental Protection Agency. September 1985. Compilation of Air Pollutant Emission Factors - AP-42. Volume I. Stationary Point and Area Sources, Fourth Edition. (Supplements A and B, October 1986 and September 1988, respectively). Research Triangle Park, North Carolina.

U.S. Environmental Protection Agency. September 1985. Source Assessment of Formaldehyde Emissions. Final Report. (Radian Corp. EPA 68-02-3818).

U.S. Environmental Protection Agency. September 1985. Source-Specific Air Toxics Data for States in EPA Region 9. Final Report. (Radian Corp. Report 85-203-024-49-06).

U.S. Environmental Protection Agency. July 1985. Survey of Carbon Tetrachloride Emission Sources. EPA 450/3-85-018. PB 85-221661/REB. Research Triangle Park, North Carolina.

U.S. Environmental Protection Agency. July 1985. Survey of Trichloroethylene Emission Sources. EPA 450/3-85-021. PB 86-107943/REB. Research Triangle Park, North Carolina.

U.S. Environmental Protection Agency. June 1985. Survey of Methylene Chloride Emission Sources. EPA 450/3-85-015. PB 86-107604/REB. Research Triangle Park, North Carolina.

U.S. Environmental Protection Agency. June 1985. Survey of Perchloroethylene Emission Sources. EPA 450/3-85-017. PB 85-233518/REB. Research Triangle Park, North Carolina.

U.S. Environmental Protection Agency. April 1985. Occupational Exposure and Environmental Release Assessment of Methylene Chloride. (PEI Associates, Inc., PN 3607-25, EPA 68-02-3935). EPA Office of Pesticides and Toxic Substances. Washington, D.C.

U.S. Environmental Protection Agency. April 1985. Sources of Ethylene Oxide Emissions. EPA 450/3-85-014. PB 85-205516/REB. Research Triangle Park, North Carolina.

U.S. Environmental Protection Agency. November 1984. Composition and Management of Used Oil Generated in the United States. EPA 530-SW-013. EPA Office of Solid Waste and Emergency Response. Washington, D.C.

U.S. Environmental Protection Agency. 1984. National Dioxin Study Tier 4-Combustion Sources: Ash Sampling Program. Final Report. PB 85-216497/REB. Research Triangle Park, North Carolina.

U.S. Environmental Protection Agency. August 1984. Source Assessment for Hexachlorobenzene. Final Report. (Radian Corp. EPA 68-02-3818).

U.S. Environmental Protection Agency. June 1982. Assessment of Trace and Toxic Emissions from Coal and Oil Combustion. (PEDCo Environmental, Inc., EPA 68-02-3173).

U.S. Environmental Protection Agency. September 1981. Survey of Cadmium Emission Sources. EPA 450/3-81-013. PB 82-142050.

U.S. Environmental Protection Agency. November 1980. Emissions Assessment of Conventional Stationary Systems. Volume III: External Combustion Sources for Electricity Generation. EPA 660/7-81-003a. PB 81-145195. (TRW Environmental Engineering Division).

U.S. Environmental Protection Agency. July 1980. Volatile Organic Compound (VOC) Species Data Manual. EPA 450/4-80-015. PB 81-119455. Research Triangle Park, North Carolina.

U.S. Environmental Protection Agency. June 1980. Health Impacts, Emissions, and Emission Factors for Non-Criteria Pollutants Subject to De Minimis Guidelines and Emitted from Stationary Conventional Combustion Processes. EPA 450/2-80-074. PB 80-221237. (TRW Environmental Engineering Division and Battelle Columbus Laboratories, EPA 68-02-3138).

U.S. Environmental Protection Agency. August 1979. Source Assessment: Chlorinated Hydrocarbons Manufacture. EPA 600/2-79-019g. PB 80-138209.

U.S. Environmental Protection Agency. April 1979. Guidance for Lowest Achievable Emission Rates from 18 Major Stationary Sources of Particulate, Nitrogen Oxides, Sulfur Dioxide, or Volatile Organic Compounds. EPA 450/3-79-024. PB 80-140262.

U.S. Environmental Protection Agency. February 1979. Emission Factors and Frequency of Leak Occurrence for Fittings in Refinery Process Units. EPA 600/2-79-044. PB 294741/4. (Radian Corp., EPA 68-02-2147, 68-02-2665). EPA Industrial Environmental Research Laboratory. Research Triangle Park, North Carolina.

U.S. Environmental Protection Agency. July 1978. Source Assessment: Non-Criteria Pollutant Emissions (1978 Update). EPA 600/2-78-044t. PB-291747/4. (Monsanto Research Corp., EPA 68-02-1874). EPA Industrial Environmental Research Laboratory. Research Triangle Park, North Carolina.

U.S. Environmental Protection Agency. January 1977. Characterization of Ash from Coal-Fired Power Plants. EPA 600/7-77-010. PB 265 374/9. (Tennessee Valley Authority). EPA Industrial Environmental Research Laboratory. Research Triangle Park, North Carolina.

U.S. Environmental Protection Agency. November 1976. Scientific and Technical Assessment Report on Nitrosamines. EPA 600/6-77-001.

U.S. Environmental Protection Agency. April 1975. Scientific and Technical Assessment Report on Manganese. EPA 600/6-75-002. PB 242 291. EPA Office of Program Integration. Washington, D.C.

U.S. Environmental Protection Agency. December 1973. Emission Factors for Trace Substances. EPA 450/2-73-001. PB 230 894/BE. Research Triangle Park, North Carolina.

Verscheuren, K. 1977. Handbook of Environmental Data on Organic Chemicals. Van Nostrand Reinhold Company. New York, New York.

Zimmerman, O., and Lavine, I. 1953. Handbook of Material Trade Names. 1953 Edition and Supplement IV. Industrial Research Service, Inc. Dover, New Hampshire.

ATTACHMENT A

EXCERPTS FROM THE EMISSION INVENTORY CRITERIA AND GUIDELINES REGULATION